NAZ BEARINGS®

Powered with
DuPont™ Engineered Composite

Most Durable
Self-lubricating Bearings
in The World

Fastest Delivery
Order-to-Door
in 3 months

NAZ BEARINGS®

Powered with
DuPont™ Engineered Composite

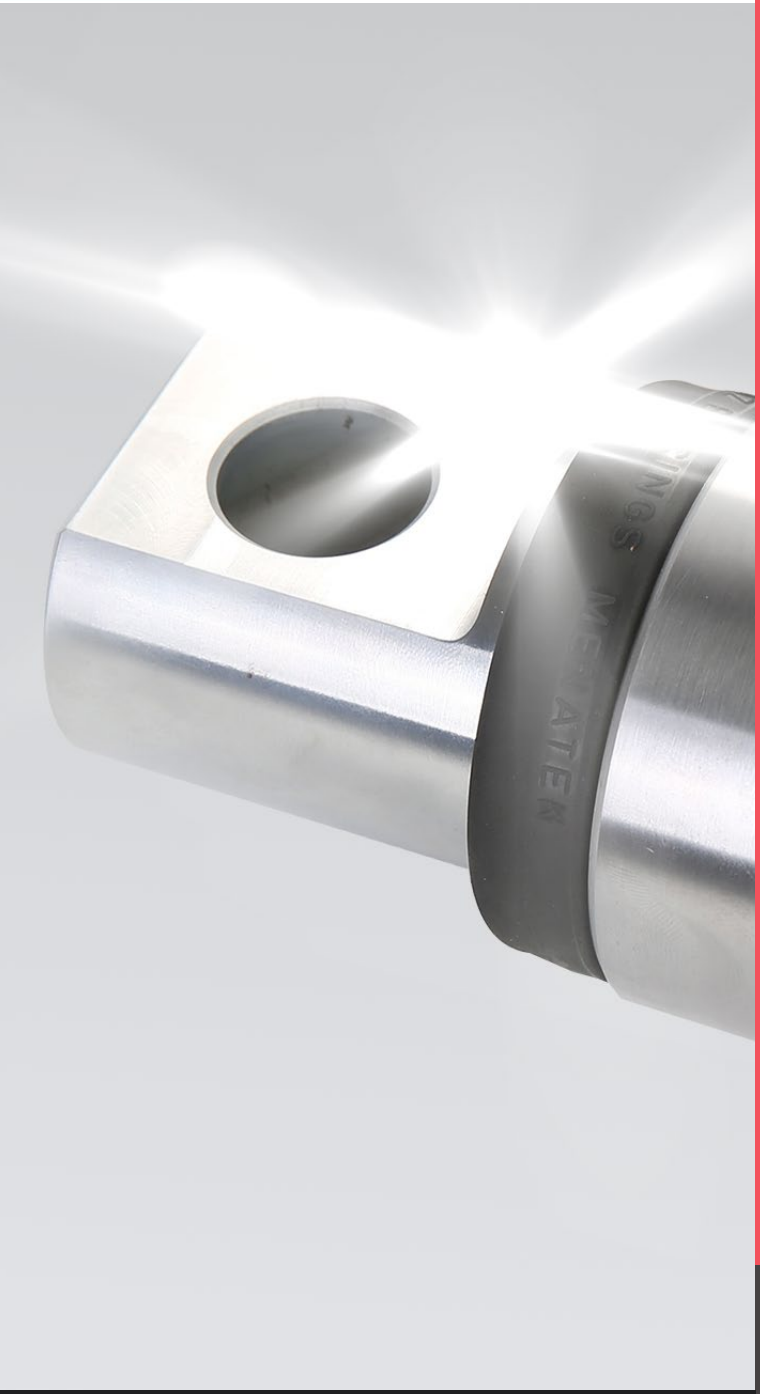

About NAZ Bearings®

NAZ Bearings® is a leading brand of **self-lubricating, maintenance-free** spherical and straddle bearings, delivering unparalleled performance and reliability across a wide range of applications.

With a focus on innovation and quality, NAZ Bearings® sets the standard for excellence in the industry.

Most Durable Self-lubricating Bearings in The World

Our Differentiation

Engineering and testing capability in **part level and system level.**

Using high quality materials and quality control in each manufacturing process

NAZ Bearings® advanced patented liner technology, developed in collaboration with DuPont, a global leader in materials science.

NAZ Bearings®

The **Journey** of **Innovation & Excellence**

Birth

2017

Answering market demand
Identifying a gap in the market, our journey began with the aim to fulfill customer needs, marking the birth of our innovative solution.

2018

First Meeting with **DuPont**

Key Meeting

Development

2019

Developed the First Prototypes
Developed the 1st Gen spherical bearing and completed its vehicle testing, followed by the advancement to **2nd Gen prototypes** with enhanced liners

2020

First Customer Order

Growth

Progress

2021

Securing the Patent for Composite Polymer liner technology

2024

(Trademark & License Agreement)
Collaboration with DuPont

Into the Future

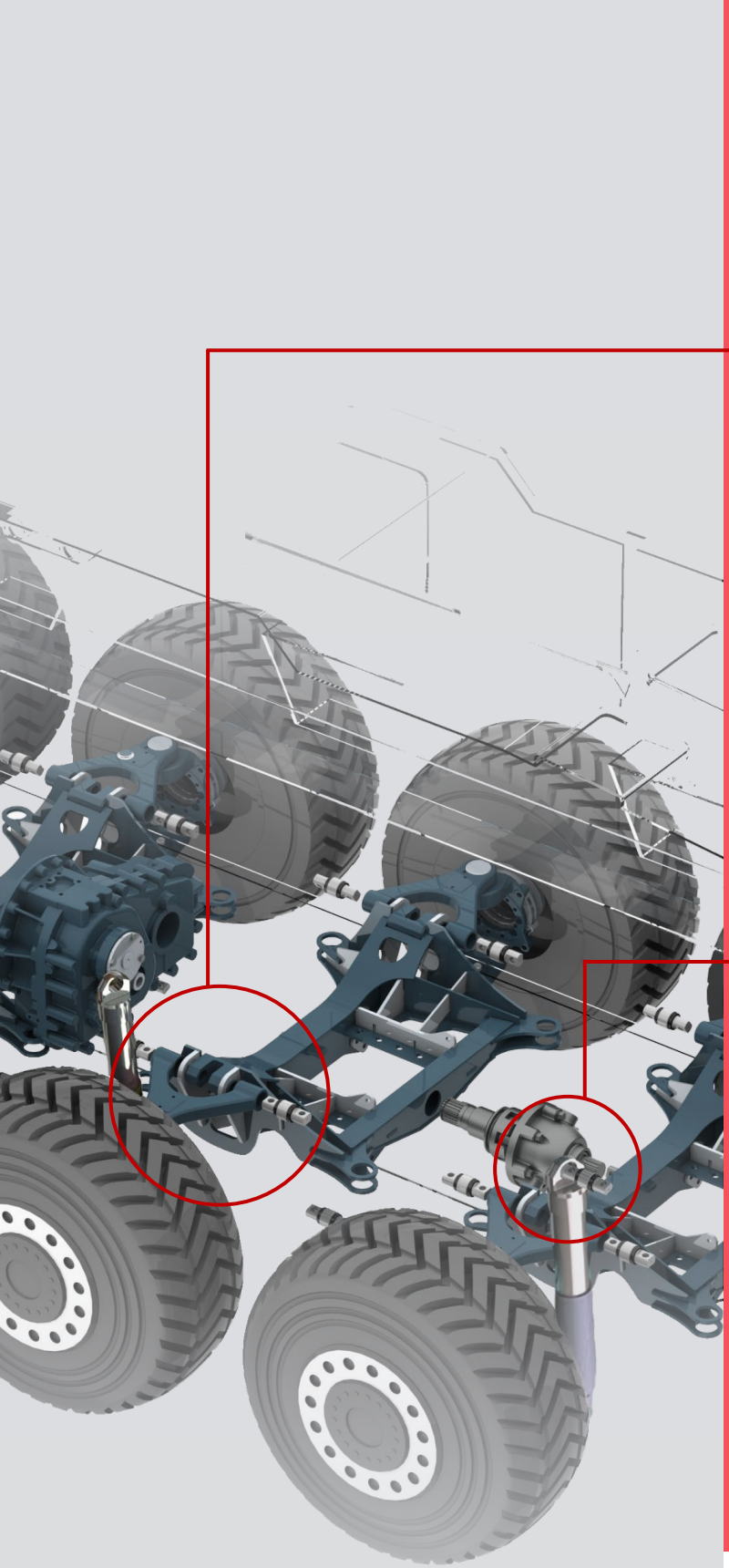

+25%
MORE
DURABLE

3x Times
LONGER
LIFE

as short as
3 Months
FASTEST
DELIVERY

Why you should **choose** NAZ Bearings®

Exceptional Quality

Manufactured to the highest standards,
using premium materials and advanced manufacturing processes,
ensuring superior quality and reliability.

Unbeatable Lead Times

We offer unbeatable lead times to provide our customers
with seamless supply and minimize downtime.

Cost-Effectiveness

We provide cost-effective solutions
without compromising on quality or performance.
Our competitive pricing ensures that our customers
receive the best possible return on investment.

Customized Solutions

We offer application-specific spherical and straddle bearings in a variety of sizes, tailored to meet the specific needs and requirements of our customers.

Proven Performance

Field-tested and trusted by leading companies worldwide, NAZ Bearings® deliver unmatched durability and performance in the most demanding applications.

Rigorous Testing

NAZ Bearings® undergo rigorous testing under quasistatic and dynamic loading conditions to ensure performance and reliability in real-world applications. Our testing capabilities include high-frequency loading, high-temperature testing and testing with mil-spec abrasive dust/debris, allowing us to validate the durability and resilience of our bearings under the most demanding conditions.

Expert Support

Our experienced team is dedicated to providing exceptional customer support, helping to find the right solutions for their specific needs and challenges. From product selection to installation and maintenance, we're here to assist every step of the way.

Technical **Specification**

Type: Self-Lubricating Maintenance-Free
Applications: Military Vehicles, Train Bogies, Aerospace, Heavy-Duty Vehicles, Industrial Machinery, Renewable Energy, Automotive, Marine and more.

Liner Properties

Liner Compressive Strength	690 Mpa
Continuous Operating Temperature	-50°C to 160°C
Short Term Operating Temperature	Up to 180°C
Debris – Dust Protection	Rubber Seal
Wear Pattern through liner body	Equally Distributed

Chemical Resistance

Water	Excellent
Steam	Excellent
Salt	Excellent
Organic Chlorides	Excellent
Solvents	Excellent
Oil	Excellent
Metal Chlorides	Excellent
Strong Acids	Excellent
High Temperature Strong Acids	Good

NAZ Bearings are manufactured to meet any desired dimensions and specifications.

Unlike traditional bearings, our bearings feature a proprietary liner that offers

Significant Advantages;

Extended Lifespan

Our liner's wear rate is 1/3 of that of our competitors, resulting in a bearing that lasts **up to three times longer**. This means reduced downtime, lower maintenance costs, and increased operational efficiency for our customers.

Reduced Friction

Our liner's **coefficient of friction is 35% less than that of traditional bearings**, resulting in **smoother operation, reduced heat generation, and improved overall performance**.

Linear Wear and COF Testing

Internal Wear Testing at 30 Ksi, 1HZ for ~21K Cycles

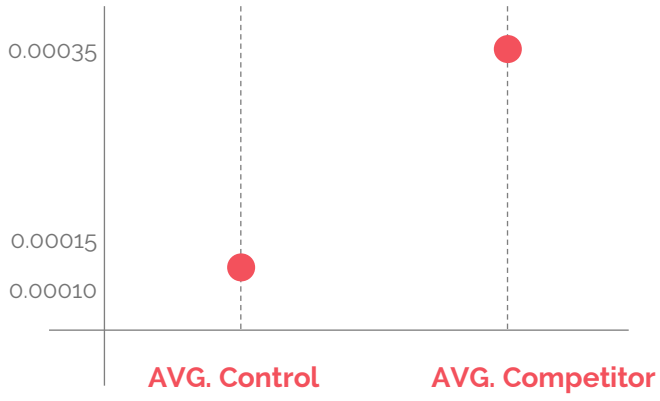

Internal COF Testing at 15 Ksi

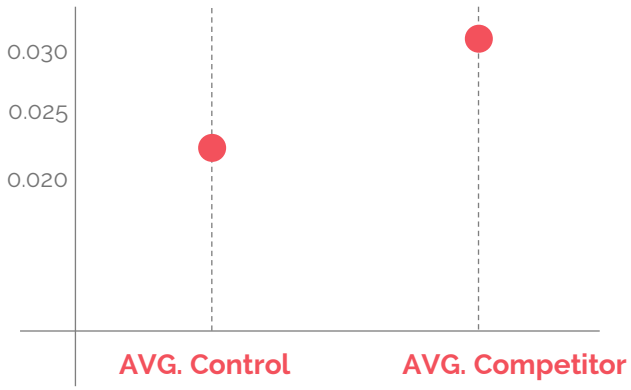

	Total Cycles	COF	Wear	Max Temperature
CONTROL	20650	0.0224	0.003 mm (0.00012 in)	38.06˚C (100.5˚F)
CONTROL	20650	0.0242	0.003 mm (0.00012 in)	31.06˚C (87.9˚F)
AVG. CONTROL	20650	0.023	0.003 mm (0.00012 in)	34.56˚C (94.2˚F)
Competitor	20650	0.0279	0.010 mm (0.0004 in)	38.06˚C (100.5˚F)
Competitor	20650	0.0306	0.008 mm (0.0003 in)	36.00˚C (96.8˚F)
AVG. Competitor	20650	0.029	0.009 mm (0.00035 in)	37.03˚C (98.65˚F)

Superior Temperature Resistance

Our bearings feature a specially engineered liner capable of enduring very low and high temperatures, ranging from -50°C up to +150°C continuously.
This ensures reliable performance even in extreme operating conditions.

Liner Material: DuPont™ Engineered Composite

Durability tests at the bearing level are conducted at a maximum temperature of 162.78°C (325°F)

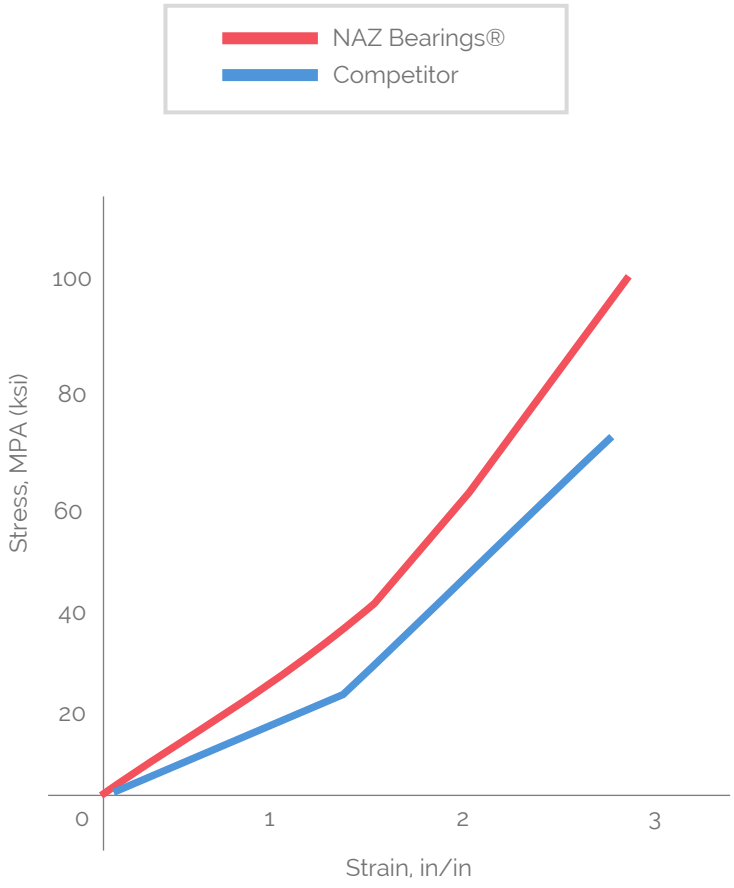

Superior Strength

With an ultimate compressive strength **25% higher than competing products,** our bearings are built to withstand extreme conditions and heavy loads without compromising performance or reliability.

Precision Machining

NAZ Bearings® are machined using ultra-high-precision CNC turning machines, achieving micron-level accuracy for ultimate reliability and performance.

Corrosion-Resistance:

Our bearings undergo coating processes to enable corrosion resistance, prolonging their lifespan and reducing maintenance requirements in challenging environments.

NAZ Bearings® can withstand salt spray test (An aqueous salt atmosphere as per MIL-STD-810H, method 509.7 of 96 hours, with alternating 24-hour wet and dry periods).
In case of customer needs coating processes might be applied corrosion resistance, prolonging their lifespan and reducing maintenance requirements in challenging environments.

CAE Analysis Capability

We have the capability to conduct various Computer-Aided Engineering (CAE) analyses for manufacturing and functioning of NAZ Bearings®. This allows our customers to define the preload on the bearing and ensure optimal performance under customer-defined static and dynamic loads.

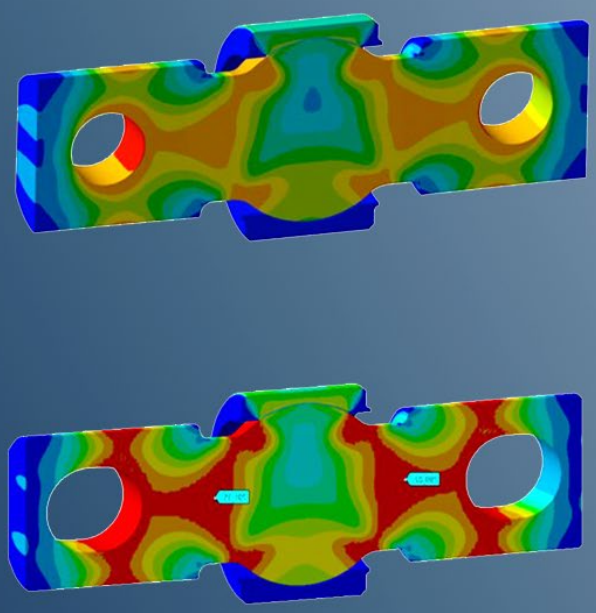

NAZ Bearings® are manufactured to meet any desired dimensions and specifications.

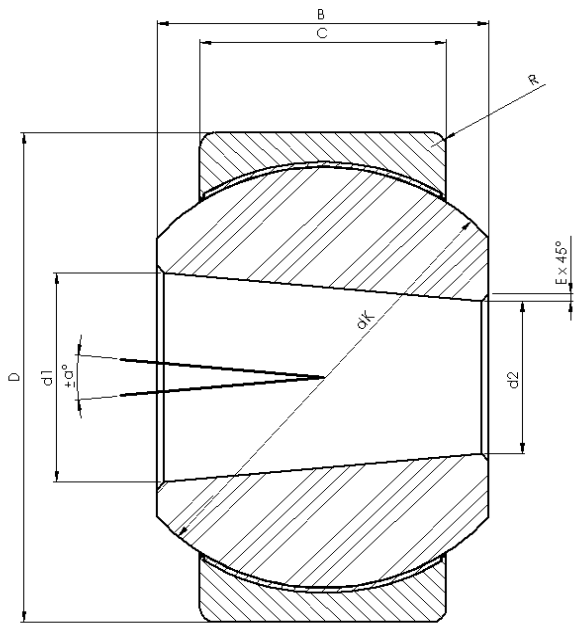

Spherical Type

Technical Specification

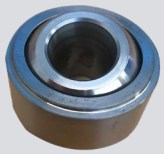

NAZ Spherical 52mm
NAZ-SPFH-52-TP

NAZ Spherical 76mm
NAZ-SPFH-76-TP

Part Number	Dimensions								
	D	d1	d2	B	C	dK (REF)	E x 45° min	R min	±α°
NAZ-SPFH-52-TP	51,65 mm	22,11 mm	16,09 mm	33,33 mm	24,68 mm	44,39 mm	0,5 mm	0,2 mm	12°
NAZ-SPFH-76-TP	76,12 mm	43,85 mm	33,92 mm	41,27 mm	39,82 mm	64,7 mm	0,5 mm	0,5 mm	7°

Part Number	Load Ratings				
	Permissible Static Load Axial	Permissible Static Load Radial	Maximum Load Axial	Maximum Load Radial	Permissible Dynamic Radial Load
NAZ-SPFH-52-TP	105 KN	580 KN	160 KN	875 KN	290 KN
NAZ-SPFH-76-TP	235 KN	1400 KN	375 KN	2100 KN	690 KN

The **above dimensions are available off the shelf**.
For **new dimensions**, the lead time can be **as short as 3 months**.
Custom tailoring may take **up to 5 months**

NAZ Bearings® are manufactured to meet any desired dimensions and specifications.

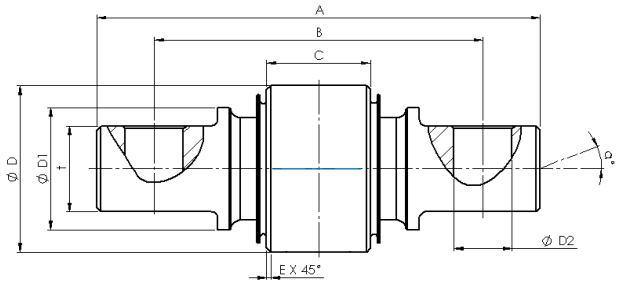

Straddle Type

Technical Specification

NAZ Straddle 54mm
NAZ-STFH-54-92

NAZ Straddle 58mm
NAZ-STFH-58-105

NAZ Straddle 62mm
NAZ-STFH-62-120
NAZ-STFH-62-128

Part Number	Dimensions							
	D	D1	D2	A	B	C	E X 45°	±α°
NAZ-SPFH-54-92	54 mm	35,5 mm	17 mm	126 mm	92 mm	32 mm	1,5 mm	11°
NAZ-STFH-58-105	58 mm	43 mm	21 mm	145 mm	105 mm	34 mm	1,5 mm	11°
NAZ-STFH-62-120	62 mm	45,54 mm	21,2 mm	162 mm	120 mm	38 mm	1,5 mm	11°
NAZ-STFH-62-128	62 mm	45,5 mm	25,2 mm	175 mm	128 mm	38 mm	1,5 mm	11°

Part Number	Load Ratings				
	Permissible Static Load Axial	Permissible Static Load Radial	Maximum Load Axial	Maximum Load Radial	Permissible Dynamic Radial Load
NAZ-SPFH-54-92	90 kN	450 kN	125 kN	700 kN	220 kN
NAZ-STFH-58-105	110 kN	600 kN	165 kN	900 kN	295 kN
NAZ-STFH-62-120	120 kN	600 kN	190 kN	1100 kN	350 kN
NAZ-STFH-62-128	120 kN	600 kN	190 kN	1100 kN	350 kN

The **above dimensions are available off the shelf**.
For **new dimensions**, the lead time can be **as short as 3 months**.
Custom tailoring may take **up to 5 months**

Application **Areas**

Military Vehicles

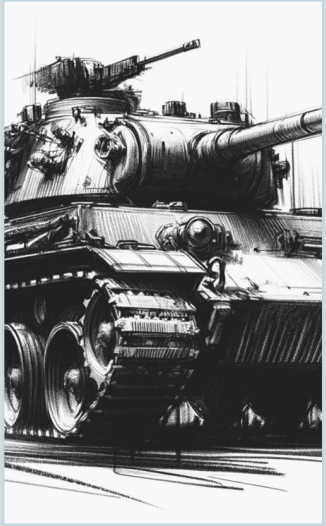

Railway

Heavy Duty Vehicles

Industrial Machinery

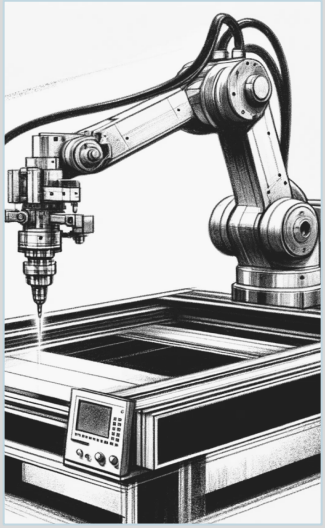

Renewable Energy

Marine

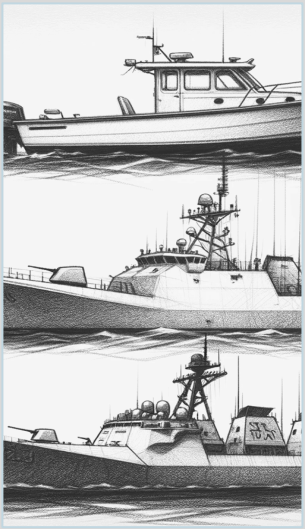

Aerospace

NAZ BEARINGS®

Powered with
DuPont™ Engineered Composite

NAZ BEARINGS®

Powered with
DuPont™ Engineered Composite

Address: **Esenşehir Mahallesi Bostancı Yolu**
Haseki Sokak No:22
Ümraniye 34776 İstanbul/TÜRKİYE

Phone: **+90 850 800 66 85**

Mail: **sales@menatek.com.tr**

www.menatek.com.tr